EZVIZ EP4

Wire-Free Peephole Door Viewer

See who’s coming, know who’s home

Introducing the EP4—smarter security, redefined. With facial recognition, it knows exactly who’s at your door, sending you precise alerts in real time. Two-way audio lets you chat with visitors, no matter where you are. Plus, live video and motion detection keep you instantly connected and in control. It’s personalized protection that’s as smart as it is secure.

- 4K Resolution
- 5.5-Inch (Color) Touch Screen
- AI-Powered Recognition for Familiar Faces
- AI-Powered Human Shape Detection & PIR Detection
- F1.6 Large Aperture
- 7,100 mAh Rechargeable Lithium Battery
- Live View & Two-Way Talk
- WDR & Distortion Correction
- Supports Local Storage[1] (Up to 512 GB)
- Suitable for Peephole from Diameter 14-50 mm

Two Color Options

Zoom in on clarity from any distance to see the full picture

The EP4 delivers vibrant, lifelike visuals that bring every detail to your doorstep—whether you're at home or on the go. With stunning 4K resolution and an ultra-wide 155° field of view, you'll see more of what's happening outside, so you're always able to make informed decisions.

4K Resolution

F1.6 Large Aperture

IP54 Weatherproof Design

Now

Past

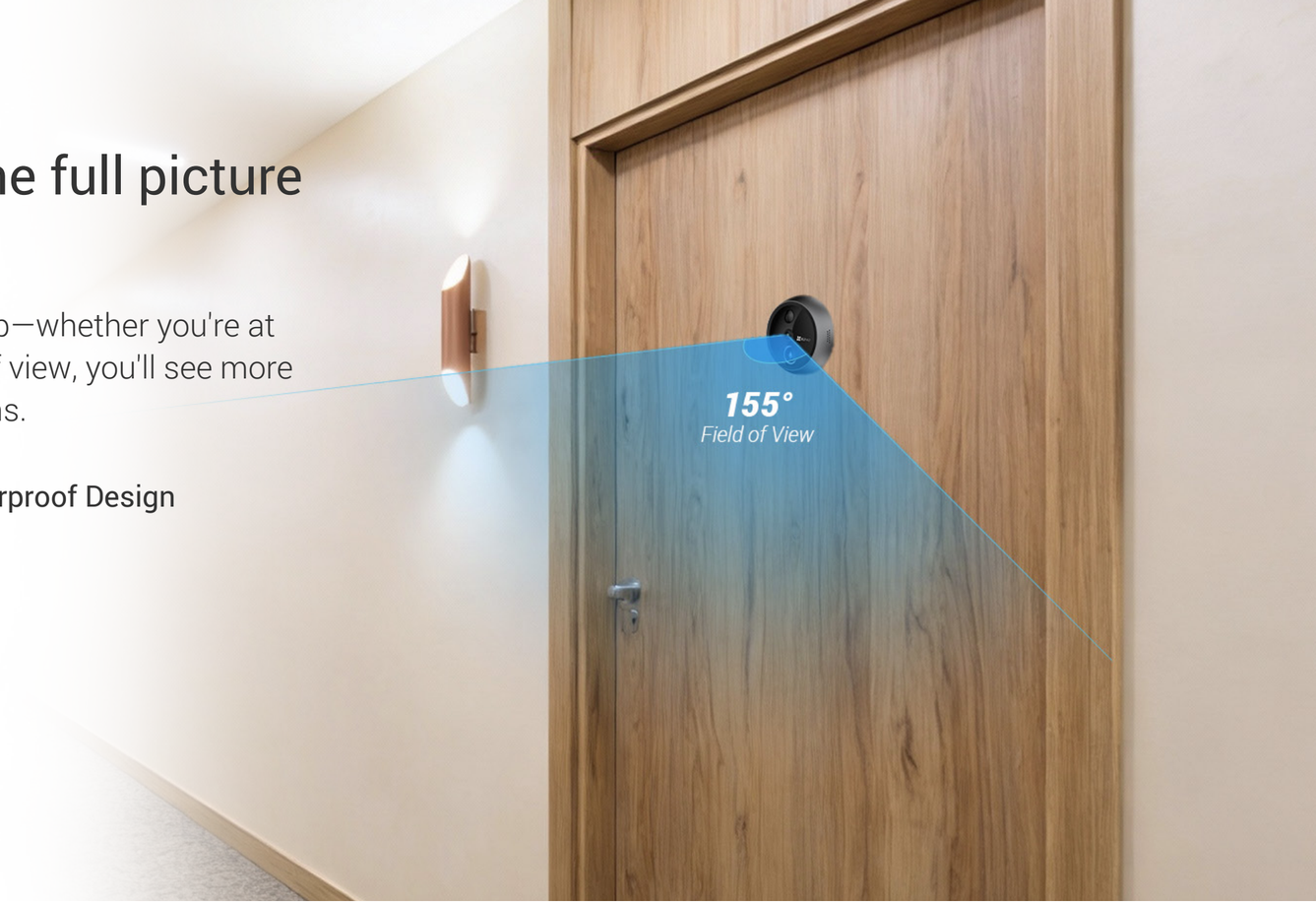

Unfold every crucial moment on the screen

With its vivid 5.5-inch color display, you'll never be caught off guard. Every image is brought to life in stunning detail, offering you a crisp, vibrant view of what's happening outside your door—whether it's visitors, deliveries, or anyone coming calling. The clear and sharp display ensures you see it all, exactly as it is.

Render eye-catching images with automatic processing

With advanced WDR and LDC technology, the EP4 captures pictures with precision and accuracy, free from overexposure or distortion.

Balance Uneven Brightness

Correct Edge Distortion

Welcome home, it always knows who's familiar

No more guessing games or vague alerts like “motion detected”—now you’ll get real-time, personalized notifications that tell you exactly who‘s at your doorstep. Now you’re reminded when a family member arrives.

Stay one step ahead with smarter detection

Instantly recognize visitors or potential threats, with alerts that are smarter and more accurate than ever before. Customize your detection sensitivity to fit your space, ensuring you only receive the most relevant notifications, whether you're at home or on the go.

Talk to who’s at your door, anytime, anywhere

Never miss a moment with seamless two-way talk, right at your fingertips. When someone rings the doorbell, you’ll get an instant notification and a live video preview of who's at your door.

A thoughtful product to see more, but worry less

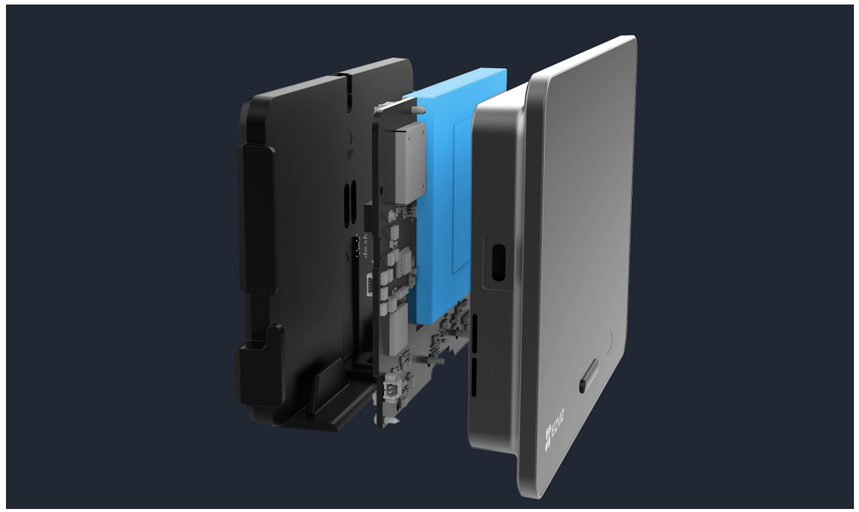

Made for long-lasting security

To guard the door and make you feel secure around the clock, the EP4 uses a built-in battery with a relatively long standby time, so you don't no need to recharge it frequently.

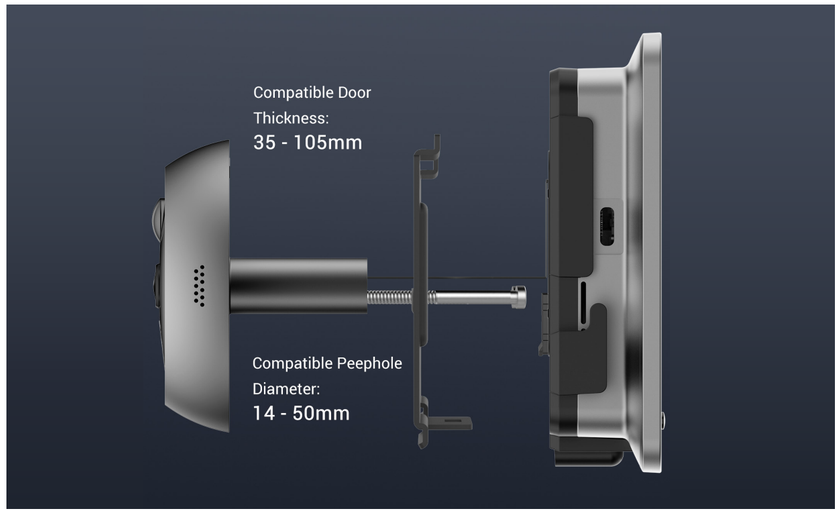

Built to fit easily and tightly

The EP4 is easy to install without complicated wiring or tools, as long as there's a compatible hole on your door. You can have the door viewer up and running in no time, all by yourself.

Extra-large, safe storage options that you can trust

You can secure your recorded videos on a local storage card of up to 512 GB, or subscribe to EZVIZ CloudPlay for fully-encrypted cloud storage.[1]

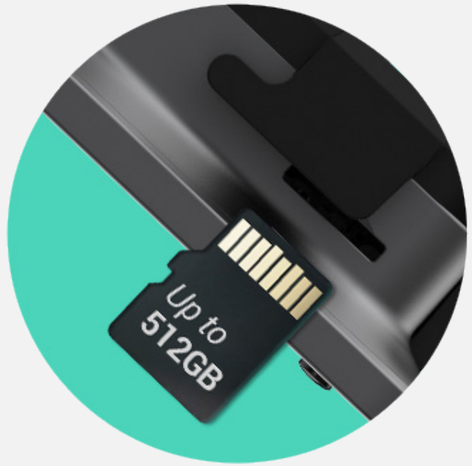

Supports Local Storage

Supports EZVIZ CloudPlay Storage

We're committed to protecting with trust

We put security as the primary goal of every product and system that we build. We have also developed various privacy features and flexible settings that you can use at any time to feel even safer.

Learn more about our security practices >

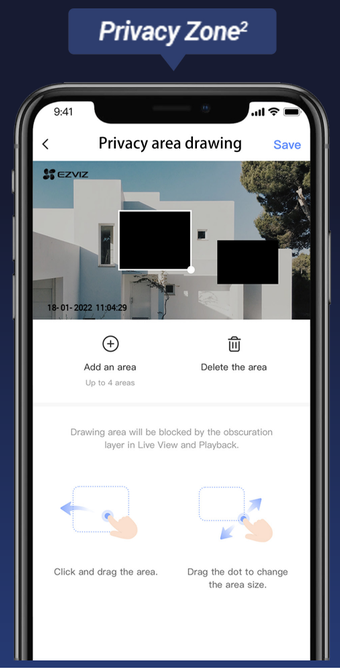

End-to-end Data Encryption

AES

Data Encryption

TLS

Data Transmission Encryption

*Our global certifications in the fields of **information security, privacy information security,** and **cloud security***

1 Cloud storage service is only available in certain markets. Please verify the availability before making any purchase.

2 Users can draw in rectangles to customize up to 4 privacy zones.

Specifications CS-EP4

Installation Parameters

Supportive Hole Diameter	14 to 50 mm (0.55 to 1.97 inch)
Supportive Door Diameter	35 to 105 mm (1.38 to 4.13 inch)

Camera Parameters

Sensor	1/2.8" Progressive Scan CMOS
Lens	2.0 mm @ F1.6, visual angle (diagonal):160°
Day / Night Switch	ICR Infrared Filter
IR Distance	Max. 5 m
Max. Resolution	4K (3840 × 2160)
Video Frame Rate	15 fps

PIR Detection

Angle	110°
Distance	Max. 6 m (20 ft)
Sensitivity	Adjustable

Interface

Storage Interface	Supports local storage (max. 512 GB)
Audio Input	Built-in high sensitivity microphone
Audio Output	Built-in high-power speaker
Buttons	Doorbell button, power button, screen wake up button

Network

Intelligence Alarm	AI-powered human motion detection & PIR motion
Protocol	EZVIZ Cloud Proprietary Protocol
Video Intercom	Local and remote video intercom
General Function	Cloud video encryption and image encryption

Wireless

Wi-Fi Standard	IEEE802.11b, 802.11g, 802.11n
Frequency Range	2.4 GHz ~ 2.4835 GHz
Channel Bandwidth	Supports 20 MHz
Security	64/128-bit WEP, WPA/WPA2, WPA-PSK/WPA2-PSK, WPS
Transmission Rate	11b: 11Mbps, 11g: 54Mbps, 11n: 150Mbps

Specifications CS-EP4

General

Screen	5.5-inch color touch screen
Color	Golden / sliver
Operating Conditions	-10°C to 45°C (14°F to 113 °F), Humidity 95% or less (non-condensing)
Power Supply	DC5V±10%
Power Consumption	Max. 5 W
Dimension	Screen and base: 103 × 142.4 × 28.4 mm (4.06 × 5.61 × 1.12 inch) Peephole doorbell: 71.7 × 71.7 × 52.7 mm (2.82 × 2.82 × 2.07 inch)
Weight	775.5 g (with package)

In the box

- Panel
- Mounting Base
- Camera
- Buckle
- Screws × 6
- Base Cover
- Power Cable
- Regulatory Information
- Quick Start Guide

Certifications

CE / REACH / WEEE / RoHS

Specifications are subject to change without notice. "™", "EZVIZ™" and other trademarks and logos are the properties of EZVIZ in various jurisdictions.

www.ezviz.com